The Characteristics and Release of Diclofenac Sodium of Niosome System in Carbomer 940 Gel Base Preparation (Niosome System of Diclofenac Sodium-Span 60-Cholesterol with Molar Ratio 1:5 :5)

by Esti Hendradi

Submission date: 09-Jan-2019 11:20AM (UTC+0800)
Submission ID: 1062402482
File name: Bukti_C-40_f.pdf (91.14K)
Word count: 1910
Character count: 10168

The Characteristics and Release of Diclofenac Sodium of Niosome System in Carbomer 940 Gel Base Preparation (Niosome System of Diclofenac Sodium-Span 60-Cholesterol with Molar Ratio 1:5 :5)

Esti Hendradi* , Tutiek Purwanti, Bety Nurfia Puspitarini, Bianda Ida Kurnia
Department of Pharmaceutics of Faculty of Pharmacy, Airlangga University, Surabaya,Indonesia
Corresponding: esti_hendradi@yahoo.com

Abstract

The present study was designed to determine the characteristics and release of diclofenac sodium of noisome system in Carbomer 940 gel base preparation. The compositions of niosome was diclofenac sodium, Span 60 and cholesterol 1:5:5. Diclofenac sodium non niosome system was used as a control. The evaluation included organoleptic, pH and sodium diclofenac released test of each formula. The result of drug entrapment efficiency of this system was 73.32±0.68%. The characteristics of gel preparation showed that niosomal system increases consistency, decreases pH of diclofenac sodium gel and also showed similarity of diclofenac sodium release compared with that control. The rate (flux) of diclofenac sodium release in control formula was 71.49±3.96 $\mu g/cm^2/minute^{½}$ and formula of the niosome system was 73.06±2.01 $\mu g/cm^2/minute^{½}$. It was analysed by statistic programmed SPSS 16.0 using independent-sample T-test with degree of believed 95% (α=0.05). The result showed that there was not a significant difference between each formula.

Key words: diclofenac sodium, niosome, Span 60, Cholesterol, flux released

Introduction

Diclofenac sodium is NSAID, the drug causes gastric irritation and undergoes hepatic first-pass metabolism (40-50%) (Ganiswara,1995). Diclofenac sodium has log P 1.13 (Budavari et al, 2001), so it hydrophobic compound and has small solubility in water and distribution in the gel based not well. One of the methods used to increase distribution in the gel based by made vesicle, niosome (Choi and Maibach, 2005). Niosome is well documented for transdermal drug delivery. Niosome system is unilamellar or multilamellar vesicle where in an aqueous solution is enclosed in highly ordered bilayer made up of nonionic surfactant with or without cholesterol and dicetyl phosphate (Biju et al, 2006). The recent study, to improve the released of diclofenac, a niosome composed of Span 60, cholesterol was prepared. The factor that influence on characteristics include size of noisome vesicle, entrapment efficiency (Ep) and released was amount, type of surfactant (HLB) and it contain of cholesterol (Patel, 2005). The research of Shahiwala and Misra (2002), niosome made from active compound of Nimesulid and used Span 20-cholesterol with molar ratio 1:3:3 has given Ep 39,00 ± 0,001%, and using molar ratio 1:6:6 the value of Ep was 91,21 ± 0,010 %.

In this study, the influence of niosome system was made from diclofenac sodium, Span 60 and cholesterol with molar ratio 1:5:5 on preparation characteristics and released of diclofenac sodium from Carbomer 940 gel base was evaluated.

Methodology

Materials

Diclofenac sodium was obtained as a gift sample from PT Dexa Medika, Carbomer 940 (Novesin Asia Pacific Ltd, Hongkong), Span 60 (Sigma), Cholesterol (Sigma), KCl (E.Merck), NaCl p.a (E.Merck), $Na_2HPO_4.12\ H_2O$ p.a (E.Merck), KH_2PO_4 p.a. (E.Merck). trietanolamin was purchased from PT. Tristar. Compound was used without mention the specification was a pharmaceutical grade.

Preparation and characterization of niosome

The composition of niosome system showed in Table 1 and the foemulation of sodium diclofenac gel preparations showed in Table 2.

Table 1. The composition of noisome system.

Compound	Molar Ratio	Amount in 20 gram preparation
Diklofenac Sodium	1	0.2002 g
Span 60	5	1.3301 g
Cholesterol	5	1.2201 g
Chloroform	-	10 mL
Aqua free of CO_2	-	9 mL
PBS pH 7.4	-	6 mL

Niosomes were prepared by using Reverse Phase Evaporation Technique (REV). The molar ratio of diclofenac sodium, Span 60 and cholesterol is 1:5:5. Drug, non ionic surfactant and Cholesterol were weighed as indicated in Table 1. Cholesterol and Span were dissolved in chloroform, diclofenac sodium in 9 mL aquadest than mixed and sonification at temperature 4-5^{0}C for 16 minutes. The mixture was added 6 mL PBS pH 7.4 ± 0.05 and sonification again 12 minutes. Than the mixture was rotavapored at 40^{0}C, 200 mmHg until chloroform disappeared (± 1.5 h) and the end evaporated using waterbath at 60° C until 15 minutes to make the concentrated suspension of niosome system. The diclofenac sodium of niosome system was analyzed for percent drug entrapment by spectrophotometric method.

The niosome system than adding the Carbomer gel with the composition as indicated in Table 2.

Table 2. The formulation of diclofenacsodium preparation.

Compound	Concentration	
	Control	Niosome System
Diclofenac Sodium	0.2001 g	-
Span 60	1.3602 g	-
Cholesterol	1.2201 g	-
PBS pH 7.4	6 mL	-
Chloroform	10 mL	-
Aqua free of CO_2	9 mL	-
Total amount of control component	12.344 g *	-
Niosom with EP 75%	-	12.852 g**
Carbomer 940	0.1000 g	0.1000 g
TEA	0.2 mL	0.2 mL

* Total amount of the control after concentrated
** Total amount of niosome system

Determination of the entrapment efficiency of diclofenac sodium in the niosome system.

The entrapment of diclofenac in the niosome system was calculated using equation 1:

$$Ep\ (\%) = \left[\frac{(Ct - Cf)}{Ct}\right] \times 100\% \quad (1)$$

where,
Ep : diclofenac sodium entrapment in the niosome system
Cf : concentration of diclofenac free (un entrapped)
Ct : total concentration of diclofenac sodium in the formulation of niosome system.

Determination of pH on the formulation

The pH of preparation was done by mixed the preparation in the aqua free of CO_2 in ratio 1:9. Mix well and than the pH of preparation was measured using pHmeter.

Determination of diclofenac released from the preparation.

Permeation study was performed apparatus 5 paddle over disk completely with diffusion cell (Figure 1) at 37°C for 6 h. As a membrane was cellophane and as donor compartment was filled by preparation of niosome system in Carbomer 940 gel. As receptor solution was phosphate buffer saline pH 7.4. At the appropriate time sample was taken from receptor solution.

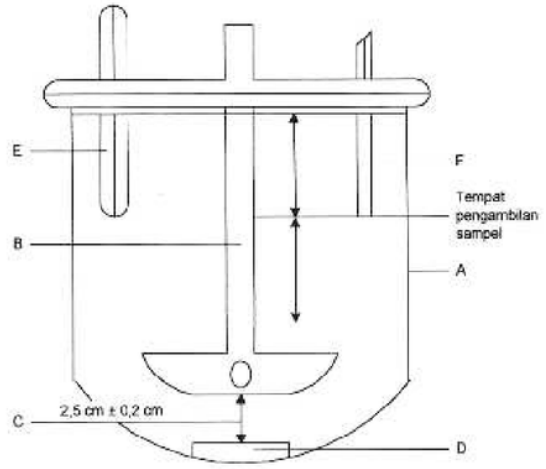

A :Diffusion chamber contain PBS pH 7.4
B :Paddle
C :Distance from paddle to diffusion membrane
D :Diffusion cell
E :Thermometer
F :Sample holder

Figure 1. Apparatus 5-paddle Over Disk (The USP Convention, 2002)

Diclofenac concentration of sample solution was measured using Spectrophotometer. Released of diclofenac sodium was calculated using equation 2 (Higuchi, 1959).

$$Q=\frac{q}{x}=[\ Dt\ (2A-Cs)\ Cs\ ]^{1/2} \quad (2)$$

where,

Q : flux of drug released
D : coefficient diffusion of drug in the based
A : concentration of drug in the based
Cs : solubility of drug in the based
t : time

Results and Discussions

The morphology of niosome system showed at the figure 2 and 3.

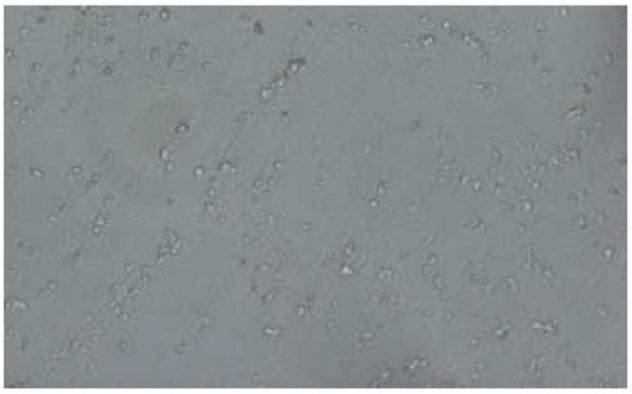

Figure 2. Morphology of noisome system using light microscope (Olympus BX 41) with magnify 1000X.

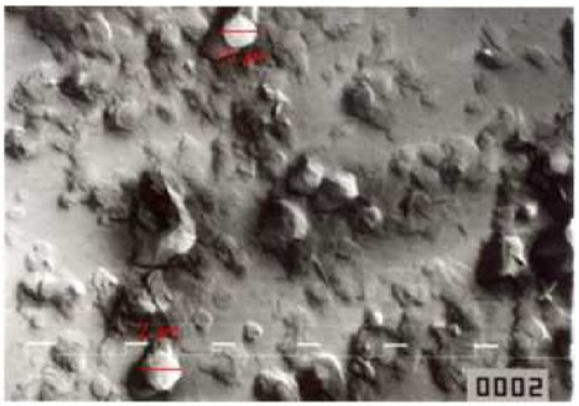

Figure 3. Morphology of niosome system using Scanning Electron Microscope (Jeol tipe JSM T-100)with magnify 2000X.

The percent entrapment of diclofenac sodium in the niosome system was shown at the Table 3.

Table 3. The entrapment efficient (Ep) of diclofenac sodium in niosome system

Replication	% Ep	Mean ± SD
I	74.60	75.32± 0.68
II	75.14	
III	76.23	

The organoleptic of Carbomer gel of diclofenac preparation showed in Table 4.

Table 4.. The organoleptic of diclofenac sodium in Carbomer gel preparations.

Formula	Observation		
	Consistency	Color	Smell
Control	Fluidity	White	No smell
Niosome System	Smooth and Viscous	White	Specific

The pH value of f diclofenac in Carbomer 940 preparations were shown at Figure 4.

Based on the statistical result of the pH using independent T-test that found the t calculated (2,980) > t tabel (2,776), it means there was significant different between control and niosom system preparation.

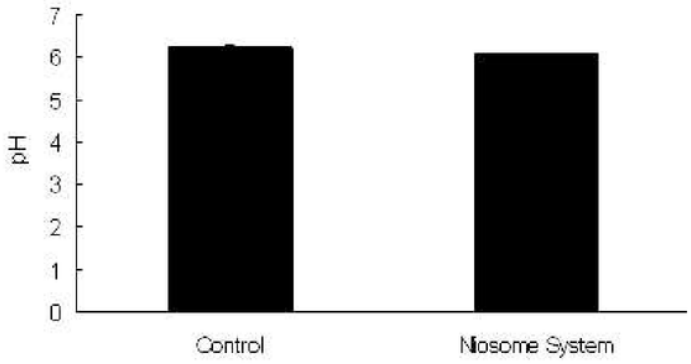

Figure 4. The pH value of diclofenac in Carbomer 940 preparations. Data were the mean of three replications ± SD.

Flux is the most useful index to evaluate the released of drug. The cumulative amount of drug released was plotted as function of root time. From the result of linear regression of steady state condition I get flux at the slope.

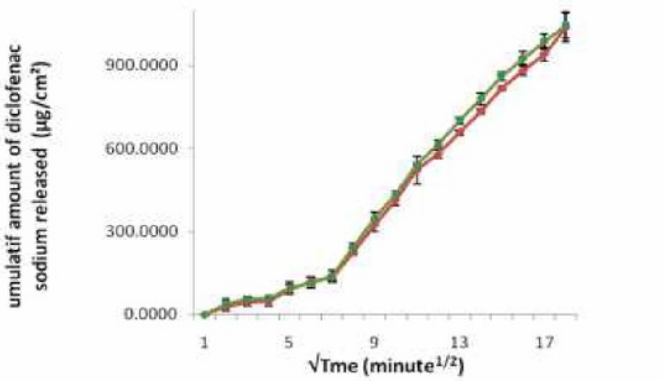

Figure 5. The profile of diclofenac released from the Carbomer 940 gel preparations. Data was the mean of three replications ± SD.(♦: Control; • Niosome System).

As shown in the Figure 5, the released profile shows the sufficient linearity with the coefficient r was ≥ 0.98.

Flux released of diclofenac sodium from Carbomer 940 gel base shown in Figure 6. In this Figure shown that the flux released of diclofenac from preparation of niosom system diclofenac sodium: Span 60: cholesterol with molar ratio 1:5:5 in Carbomer 940 gel base was insignificantly different compared with that of control. It caused the niosome system that used in the formulation was without separated the entrapment and not entrapment. So the profile was similar. Beside that maybe it caused the experiment was done only until 6 hours.

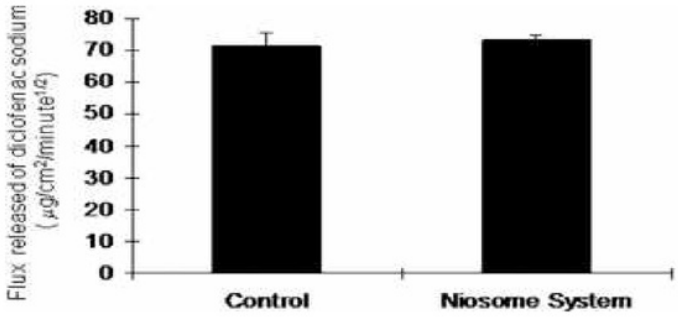

Figure 6. Flux released of diclofenac from Carbomer 940 gel base. Data was the mean of three replications ± SD.

From the results of the experiment we suggest that the experiment must done longer than 6 hours and the vesicle of niosome is separated from diclofenac sodium that is not entrapment in the vesicle.

As shown in the Figure 5, the released profile shows the sufficient linearity with the coefficient r was ≥ 0.98.

Conclusion

The conclusions of the experiment were:

1. The drug entrapment efficiency (Ep) of the niosome system was 73.32 ± 0.68%.
2. The characteristics of gel preparation showed that niosomal system increased consistency, decreased pH of diclofenac sodium gel.
3. The flux of diclofenac sodium release in control formula was 71.49±3.96 $\mu g/cm^2/minute^{½}$ and formula of the niosome system was 73.06±2.01$\mu g/cm^2/minute^{½}$. The statistic result of the flux of diclofenac released showed that there was not a significant difference between each formula.

References

Biju, S.S., Talegaonkar S., Mishra P.R. And Khar R.K., 2006. Vesicular Systems: An Overview. Indian J. Pharm Sci, 68 (2): 141-153

Budavari, S., 1996. The Merck Index 12th. USA: Merck & CO., INC. p. 521

Choi, M. J., Maibach, H. I., 2005. Liposomes and Niosomes as Topical Drug Delivery Systems, Skin Pharmacology and Physiology 2005, J. of Pharmacol. and Biophis. Res., Vol. 18, No.5, p.209-219.

Ganiswarna, S. G., 1995. Farmakologi dan Terapi, Edisi IV, Jakarta: Bagian Farmakologi FKUI, hal. 207-210, 218.

Higuchi, T., 1959, Physical Chenical Analysis of Percutaneous Absorption Process From Creams and Ointments. Presented September 23-24, 1959, Seminar, New York City.

Patel, Rakes P., 2005. Niosome : An Unique Drug Delivery System, http://pharmainfo.net. Tanggal akses 11 November 2008

Shahiwala, A., Misra, A., 2002. Studies in Topical Application of Niosomally Entrapped Nimesulide, J. of Pharm. Sci, Vol. 5, No. 3, p 220-225.

The Characteristics and Release of Diclofenac Sodium of Niosome System in Carbomer 940 Gel Base Preparation (Niosome System of Diclofenac Sodium-Span 60-Cholesterol with Molar Ratio 1:5 :5)

ORIGINALITY REPORT

5%	4%	2%	0%
SIMILARITY INDEX	INTERNET SOURCES	PUBLICATIONS	STUDENT PAPERS

PRIMARY SOURCES

1	journal.unair.ac.id Internet Source	2%
2	Preeti Khulbe. "chapter 5 Vesicular Drug Delivery Systems", IGI Global, 2017 Publication	1%
3	tjsianturi.blogspot.com Internet Source	1%
4	www.ijppsjournal.com Internet Source	1%
5	Hashim, Fahima, Mohamed El-Ridy, Mohamed Nasr, and Yasmin Abdallah. "Preparation and characterization of niosomes containing ribavirin for liver targeting", Drug Delivery, 2010. Publication	<1%
6	www.academicjournals.org Internet Source	<1%

Exclude quotes	Off	Exclude matches	Off
Exclude bibliography	On		